" СИГМА БЪЛГАРИЯ" ООД

Официален вносител на помпи и помпено оборудване на Комбинат "SIGMA-Lutin"-Чехия

Русе 7012
ул.Борисова 72
E-mail:sigma@mlnk.net
www.sigma-bg.dir.bg

тел/факс 00359 82 823107
GSM 00359 88 8706650
GSM 00359 88 7716762

SUMMARY

MAGNETIC COUPLED MOTOR-PUMPS
POLYPROPYLENE VERSIONS 6

MAGNETIC COUPLED MOTOR-PUMPS
PVDF VERSIONS 7

MAGNETIC COUPLED MOTOR-PUMPS
SPECIAL MODELS 8

MOTOR-PUMPS WITH MECHANICAL SEALS
POLYPROPYLENE AND RUBBER LINED CAST IRON VERSIONS 12

MOTOR-PUMPS WITH MECHANICAL SEALS
PVDF VERSIONS 13

VERTICAL MOUNTED MOTOR-PUMPS
WITH CANTILEVER SHAFT 16

VERTICAL MOUNTED MOTOR-PUMPS
WITH BOTTOM BEARING 18

VERTICAL MOUNTED MOTOR-PUMPS
WITH BACK-IMPELLER AND HORIZONTAL OUTLET 19

VERTICAL MOUNTED MOTOR-PUMPS
WITH BACK-IMPELLER AND VERTICAL OUTLET TUBE 20

FLANGE AND UNION NUT FITTINGS / FIXATION PLATE FOR "T" PUMPS 21

Centrifugal pumps type M7 to M20 with magnetic coupling are manufactured by French company ***SIEBEC*** . This company has long time experience in manufacturing quality pumps and filtering apparatuses for pumping and filtering of corrosive liquids.
Pumps type M7 are wquipped with single-phase 230V, 50Hz electric motor. For pump M15 and M20 is used either singlephase motor 230V, 50Hz or three-phase electric motor 3 x 400V, 50Hz. M7 pump electric motor cowling is made out of PP.
Pump units are built up from PP pressings which are joint together by easily accesible bolts. Sealing of the static parts is alternativelly from EPDM or FPM. Rotor is driven by ceramic schaft which guarantees long service life and reliability of the pumps. Magnetic coupling eliminates risk of the fore-run and restricts maintenance need. M7 and M15 pump ports forms
part of the casing, on type M20 are ports screwed on. Hoses, pipe unions (M15, M20) or flanges (m20) may be used as a pump attachments.
Temperature of pumped medium is 90 °C maximum, thickness up to 1,6 kg/dm3 for M15, M20 and 1,2 kg/dm3 M7.

Pumps are designed for use in:

- chemical industry (for all ranges of pH)
- galvanizing plants
- neutralizing stations
- fotolaboratories, pharmaceutical laboratories
- food industry

Technical data

Type	Max. pumping power [m3/h]	Max. discharge [m]	Input [kW]	Mass [kg]	Size [mm]
M7	0,7	4	0,085	1,9	214x110x125
M15	5	6	0,045	3,1	303x107x162
M20	2,8	7	0,09	4,6/3,5	285x110x165

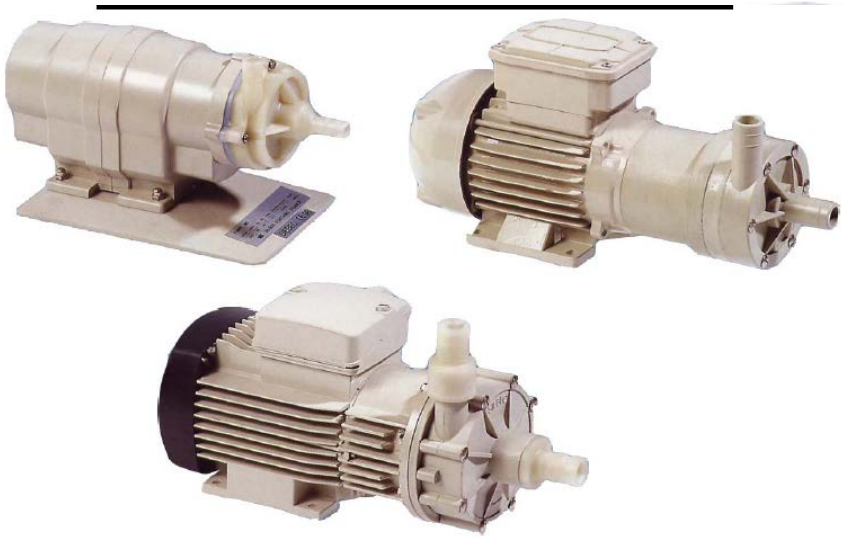

M7

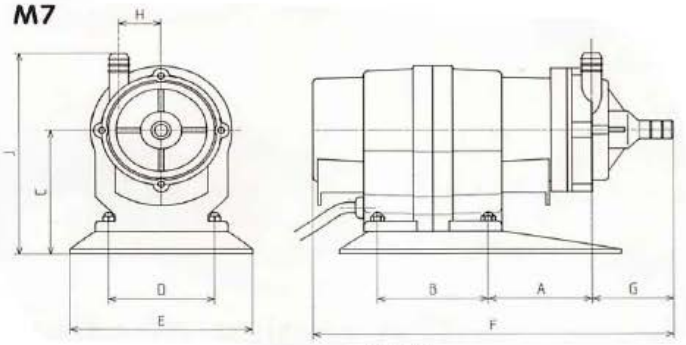

M15

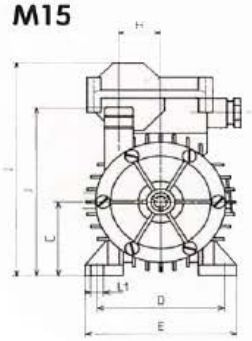

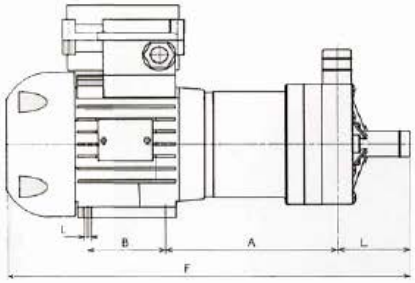

M20

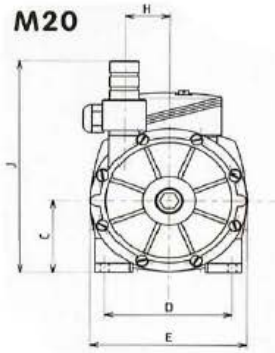

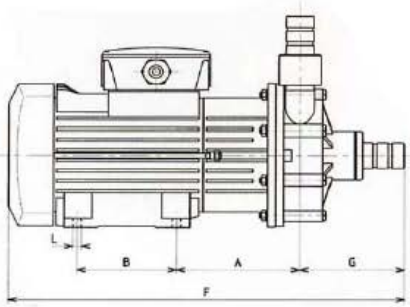

	M20	M15	M7
A	88,25	119,5	62,3
B	71	71	67
C	56	56	82
D	90	90	64
E	111	107	110
F	283,5	303	218,3
G	75,25	49,5	50
H	32	29,5	25,5
I	--	162	--
J	164	100	133
K	--	--	--
L	6	6	--
L1	--	9	--

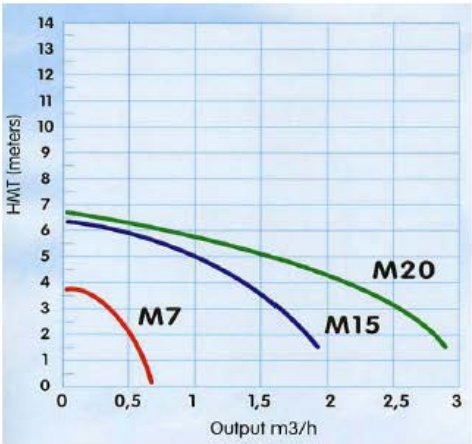

PUMPS WITH MAGNETIC COUPLING M35, M50, M100, M140, M200

Type M50, M100, M140 and M200 pumps are used to pump corrosive liquids. Motor is separated from pump by solid wall, which ensures perfect tightness and simplify maintanence.
Those segments, which cones into contact with liquid are made out of Polypropylene (PP) or in case of need Polyvinylidenfluoride (PVDF). Segments which are stressed by friction are made out of special ceramics and reinforced teflon. Depending on pumped liquid, sealing is made out of material called FPM or HYPALON. Working temperature is 90 °C max. pumps are self-priming.

Motors:
230V/400V, 50Hz or according to requirements, Single-Phase Motors, Explosion engine models and models for special voltage.

Possible pump connection:
- Stand with thread
- Hose fitting
- Fitting with flange
- Other version acc. to requirements

Pumps with magnetic coupling are utilized in:
- in chemical industry (for all pH range)
- galvanizing plant
- neutralization stations
- fotolaboratories, pharmaceutical laboratories
- food industry

Technical data

Type	Max. pumping power [m3/h]	Max. discharge [m]	Input [kW]	Mass [kg]	Size [mm]
M35	3	10	0,18	6	340x140x185
M50	5	10	0,18	6	340x140x185
M100	10	18	0,75	15	488x178x243
M140	14	19	1,1	16	488x178x243
M200	20	19	1,1	16	488x178x250

M35 - M50

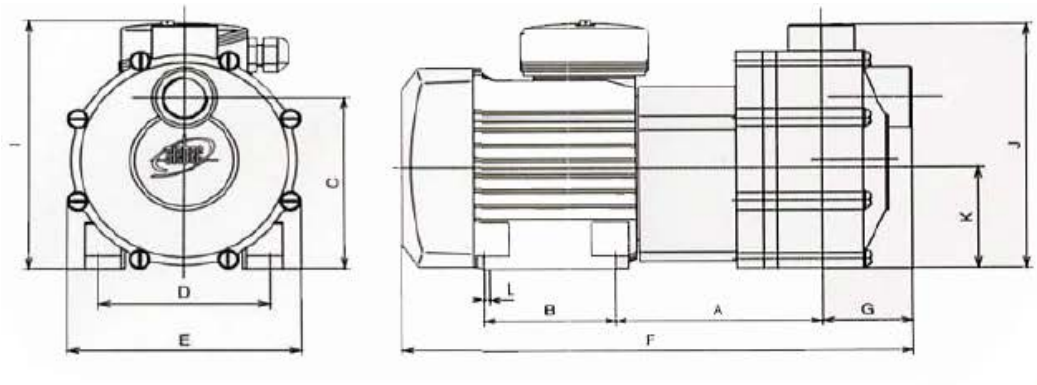

M100 - M140 - M200

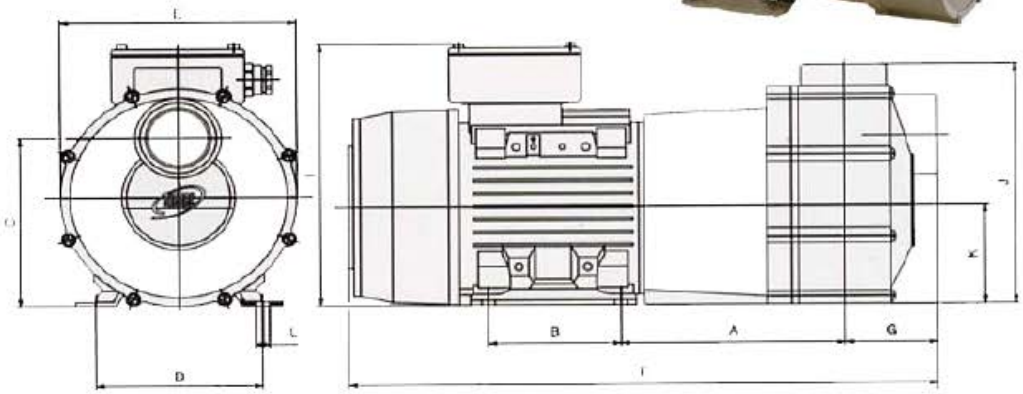

	M35 - M50	M100 - M140 - M200
A	121	169
B	80	100
C	107	137
D	100	125
E	136	177
F	305	444
G	52	70
H	-	-
I	155.5	213
J	153	194.5
K	63	80
L	7	10

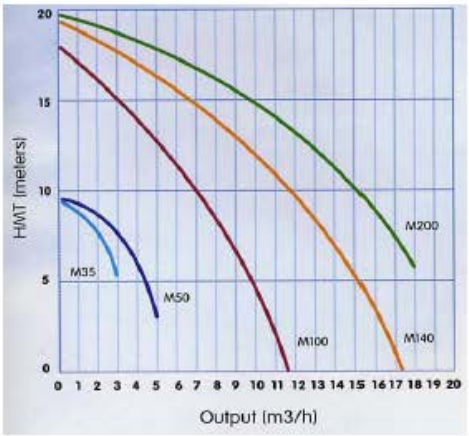

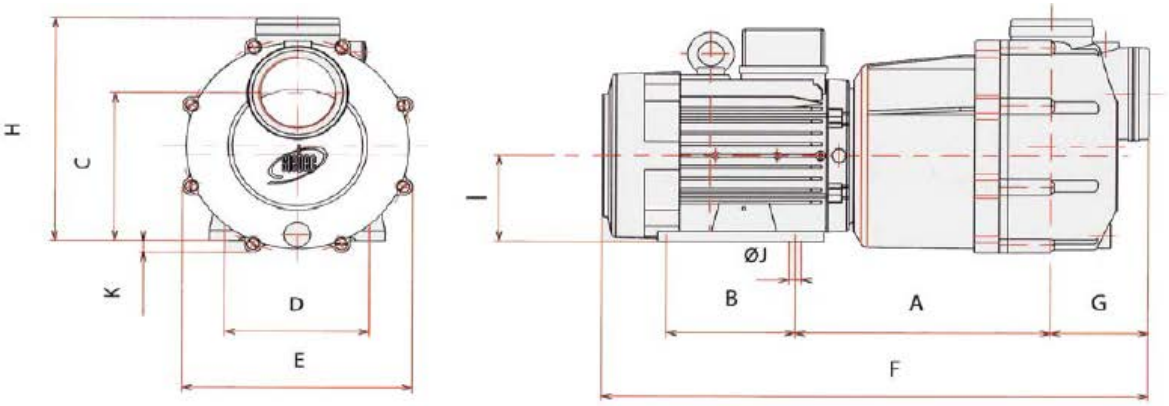

Cote	A	B	C	D	E	F	G	H	I	ØJ	K
M300	250 mm	125 mm	155 mm	140 mm	223 mm	534 mm	95.5 mm	233 mm	90 mm	10 mm	12 mm
M400	264 mm	140 mm	177 mm	190 mm	223 mm	580 mm	95.5 mm	255 mm	112 mm	12 mm	10 mm

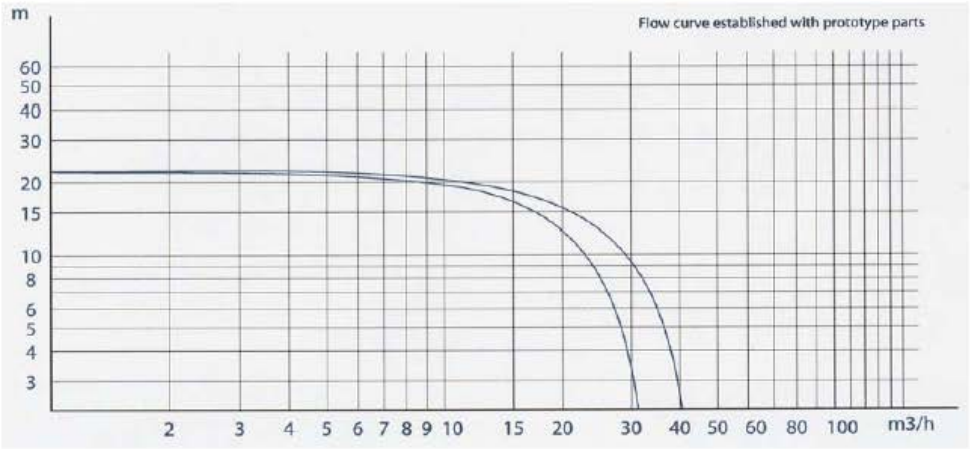

MAGNETIC COUPLED MOTOR-PUMPS IN POLYPROPYLENE

Self-repriming

M7 to M400 models

- Polypropylene pump assy
- 230 V or 230/400 V - 50 Hz - 3 ph motor - 2,900 rpm
- Self-repriming (except for M7, M15, M20)
- Standard inlet/outlet with grooved nozzles,
  optional union nut or flange fittings with extra charge (p. 10),
  this option is not possible for M7. For M15 with union nuts : please refer to p. 3.
- Serial-mounted strainer (on M100/140/200/300/400) built into the volute case

Model	Power (kW)	Max. output (m3/h)	Max. head (m)	Motor	Gaskets	Reference	Pump assy Reference
M7	0.01	0.7	4	230V-1 ph	EPDM FPM	**M7-50052** **M7-50640**	**CM7-50219** **CM7-50757**
M15	0.045	2	6	230 V-1 ph	EPDM FPM	**M15-51789** **M15-51790**	**CM15-50402** **CM15-50758**
				230/400 V-3ph	EPDM FPM	**M15-51791** **M15-51792**	
MW15	0,09	2	6	230V-1 ph	EPDM FPM	**SW1551789** **SW1551790**	
M20	0.09	2.8	7	230 V-1 ph	EPDM FPM	**M20-50102** **M20-50209**	**CM20-50042** **CM20-50763**
				230/400 V-3ph	EPDM FPM	**M20-50050** **M20-50109**	
M35	0.18	3	10	230 V-1 ph	EPDM FPM	**SM3551412** **SM3551420**	**CM35-51422** **CM35-51423**
				230/400 V-3ph	EPDM FPM	**SM3551405** **SM3551421**	
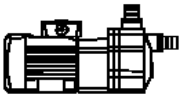 **M50**	0.18	5	10	230 V-1 ph	EPDM FPM	**SM5050917** **SM5050919**	**CM50-50043** **CM50-50250**
				230/400 V-3ph	EPDM FPM	**SM5050831** **SM5050838**	
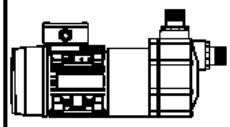 **M100**	0.75	10	18	230/400 V-3ph	EPDM FPM	**M100-50239** **M100-50431**	**CM100-50038** **CM100-50441**
	0,75	10	18	230 V-1 ph	EPDM FPM	**S10250239** **S10250431**	
M140	1.1	14	19	230/400 V-3ph	EPDM FPM	**S14050240** **S14050512**	**CM140-50039** **CM140-50768**
	1,1	14	19	230 V-1 ph	EPDM FPM	**S14250240** **S14250512**	
M200	1.1	20	19	230/400 V-3ph	EPDM FPM	**M200-50241** **M200-50438**	**CM200-50040** **CM200-50569**
	1,1	20	19	230 V-1 ph	EPDM FPM	**S20250241** **S20250438**	
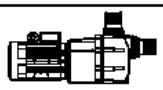 **M300**	2.2	30	22	230/400 V-3ph	EPDM FPM	**M300-52210** **M300-52234**	
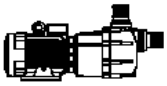 **M400**	4	40	22	230/400 V-3ph	EPDM FPM	**M400-52209** **M400-52233**	

FPM is the standard name for Viton

Motor-pumps with other voltages and/or 60 Hz : upon request, with extra charge

Drawings show motor-pumps with grooved nozzles

MAGNETIC COUPLED MOTOR-PUMPS IN PVDF

Self-repriming

M35 to M400 models

. PVDF pump assy, FPM * gaskets. EPDM gaskets upon request
. 230 V or 230/400 V - 50 Hz - 3 ph motor - 2,900 rpm
. Self-repriming
. Standard inlet/outlet with grooved nozzles,
optional union nut or flange fittings with extra charge (p. 10)
. Serial-mounted strainer (on M100/140/200/300/400) built into the volute case

Model	Power (kW)	Max. output (m3/h)	Max. head (m)	Motor	Reference	Pump assy Reference
M35	0.18	3	10	230V-1 ph	**SM3551427**	**CM35-51428**
				230/400 V-3 ph	**SM3551426**	
M50	0.18	5	10	230 V-1 ph	**SM5050922**	**CM50-50045**
				230/400 V-3 ph	**SM5050841**	
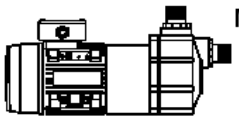 **M100**	0.75	10	18	230/400 V-3 ph	**S10050892**	**CM100-51002**
	0,75	10	18	230 V-1 ph	**S10250892**	
M140	1.1	14	19	230/400 V-3 ph	**S14050309**	**CM140-50041**
	1,1	14	19	230 V-1 ph	**S14250309**	
M200	1.1	20	19	230/400 V-3 ph	**S20050310**	**CM200-50323**
	1,1	20	19	230 V-1 ph	**S20250310**	
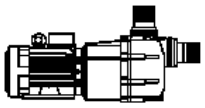 **M300**	2.2	30	22	230/400 V-3 ph	**M300-52236²**	
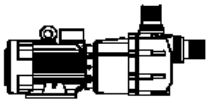 **M400**	4	40	22	230/400 V-3 ph	**M400-52235²**	

* FPM is the standard name for Viton.
² for availability, please check with us

Motor-pumps with other voltages and/or 60 Hz : upon request, with extra charge

Drawings show motor-pumps with grooved nozzles

MAGNETIC COUPLED MOTOR-PUMPS M15 with union nut

Polypropylene M15 models with union nut fittings

. Polypropylene pump assy
. 230 V or 230/400 V - 50 Hz - 3 ph motor - 2,900 rpm
. Union nut fittings welded on the volute case

Model	Power (kW)	Max. output (m3/h)	Max. head (m)	Motor	Gaskets	Reference	Reference
M15	0.045	2	6	230V-1 ph	EPDM	**M15-51797**	**CM15-51430**
					FPM	**M15-51798**	**CM15-51502**
				230/400 V-3 ph	EPDM	**M15-51799**	
					FPM	**M15-51800**	
MW15	0,09	2	6	230V-1 ph	EPDM	**SW1551797**	
					FPM	**SW1551798**	

FPM is the standard name for Viton.

MAGNETIC COUPLED MOTOR-PUMPS - PVDF reinforced magnetic coupling

PVDF M100 and M140, for liquids with high S.G.

. PVDF pump assy, FPM gaskets. EPDM gaskets upon request
. 230/400 V - 50 Hz - 3 ph motor - 2,900 rpm
. Self-repriming
. Standard inlet/outlet with grooved nozzles,
optional union nut or flange fittings with extra charge (p. 10)
. Reinforced magnetic coupling for liquids to 2.0 S.G.
. Serial-mounted strainer built into the volute case

Model	Power (kW)	Max. output (m3/h)	Max. head (m)	Motor	Gaskets	Reference	Pump assy Reference
M100	1.1	10	18	230/400 V-3 ph	FPM	**S10050962**	**CM100-51248**
M140	1.5	14	19			**S14051829**	**CM140-51249**

FPM is the standard name for Viton.

MAGNETIC COUPLED MOTOR-PUMPS - PVDF/EPDM

Model	Power (kW)	Max. output (m3/h)	Max. head (m)	Motor	Gaskets	Reference
M35	0,18	3	10	230/400 V-3 ph	PTFE	**SM3551426**
M50	0,18	5	10	230/400 V-3 ph	PTFE	**SM5050841**
M100	0.75	10	18	230/400 V-3 ph	PTFE	**S10050892**
M140	1.1	14	19	230/400 V-3 ph	PTFE	**S14050309**
M200	1.1	20	19	230/400 V-3 ph	PTFE	**S20250310**

Motor 230V, 50Hz or in Ex upon request with extra charge for M35 - M50 14 (€)
M100 - 200 28 (€)

PUMPS WITH MECHANICAL SHAFT SEAL
A15, A18, A19, A27, A30, A31, A32, A33

Centrifugal pumps with mechanical shaft seal type A, in co-operation with French company SIEBEC, which has longtime tradition in manufacturing quality pumps and filtration apparatuses for aggressive media pumping.
Body of pumps type A15 - A30 are made out of polypropylene (PP) or polyvinylidenfluoride (PVDF), sealed by Hypalon or Viton seals. Pump body is assembled with pumped media, these pumps are self-priming. Connection can be done with hose fittings, fittings with flanges, unions or as otherwise required.
Body of pumps type A31, A32, A33 is made out of cats iron lined with Ebonite, rotor is polypropylene pressing. Pumps are connected with flanges.
Pump housing is sealed with rotating gland build-up of stationary and ratating ring. Type of gland material depends on conveyed media.
Range of motors si 3 x 400V, 50Hz, IP54, if required in range I/55. SNV1 and for special voltage.

Pumps are designed for use in:

- chemical industry (for all ranges of pH)
- galvanizing plants
- neutralizing station
- fotolaboratories, pharmaceutical laboratories
- food industry

A 15

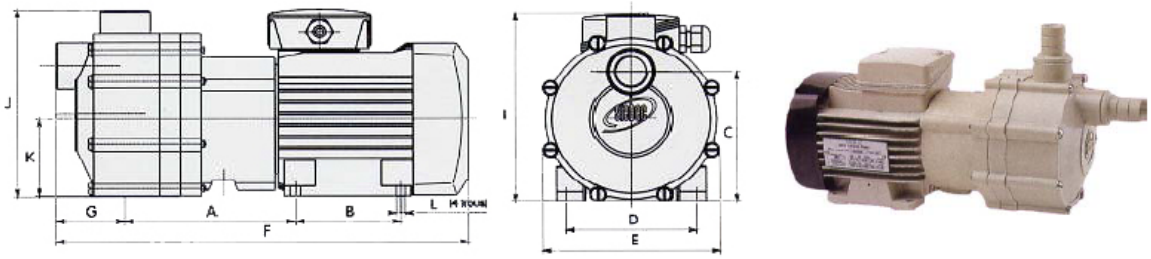

A 18 - A 19

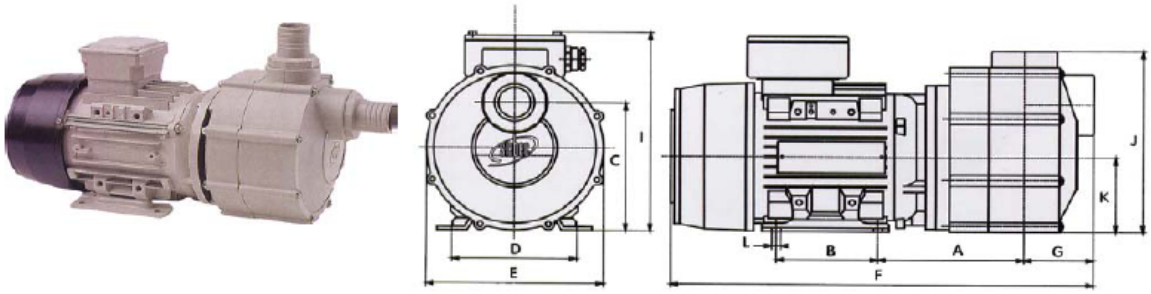

A 27 - A 30

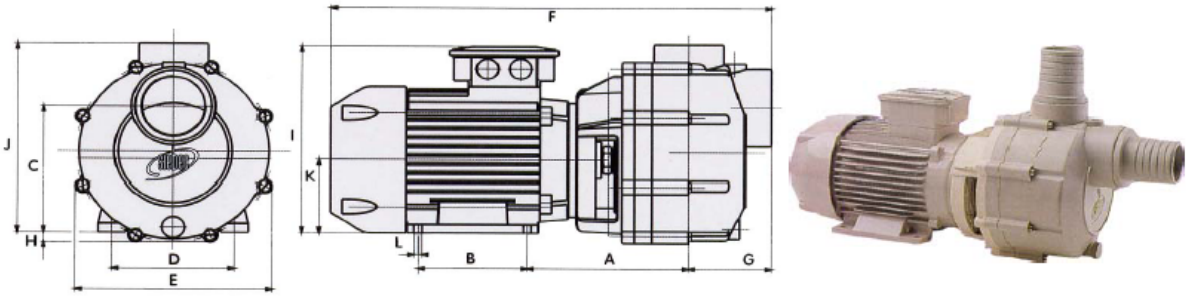

Ref.	A15	A18-A19	A27	A30
A	129	144	185	199
B	80	100	125	140
C	107	137	155	177
D	100	125	140	190
E	136	178	223	223
F	313	420	505.5	560.5
G	52	70	95.5	95.5
H				
I	155.5	215	230	276
J	153	194.5	233	255
K	63	80	90	112
L	7	10	9	12

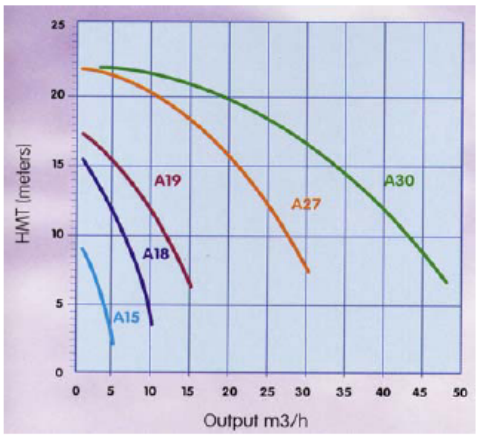

A31 - A 32- A 33

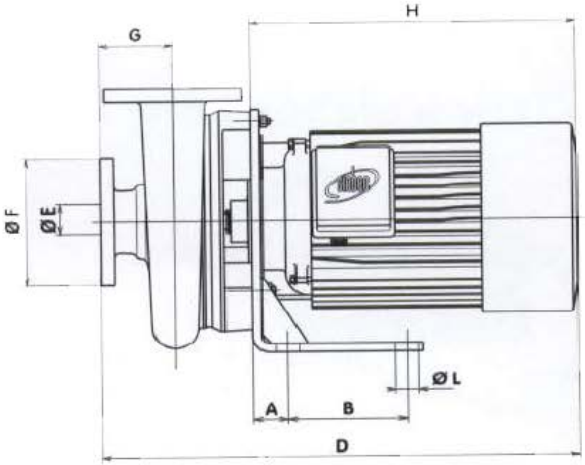

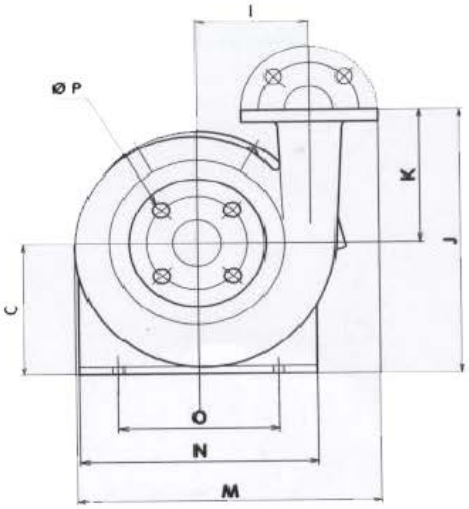

	A31	A32	A33
A	84	84	84
B	130	130	130
C	155	155	155
D	478	499	479
E	54	54	54
F	150	150	150
G	80	80	80
H	314	335	315
I	124	124	124
J	310	310	310
K	155	155	155
L	12 x 25	12 x 25	12 x 25
M	329	329	329
N	260	260	260
O	175	175	175
P	18	18	18

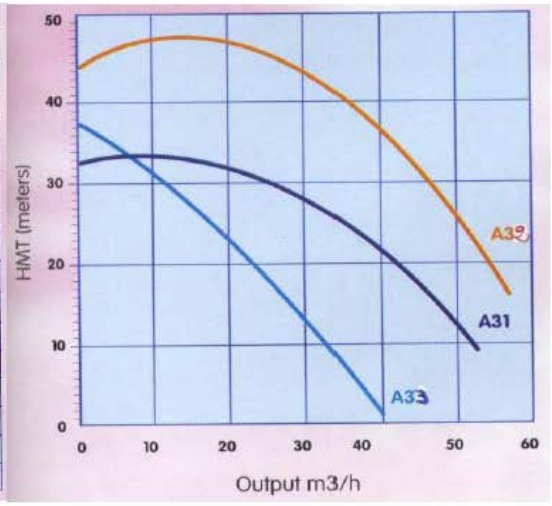

MECHANICAL SEALED MOTOR-PUMPS IN POLYPROPYLENE

Self-repriming

A15 to A30 models

- . Polypropylene pump assy
- . 230/400 V - 50 Hz - 3 ph motor - 2,900 rpm
- . Serial-mounted strainer built into the volute case (except for A15)
- . Serial-mounted carbide/carbide seals (other types of seals available upon request)
- . Self-repriming
- . Standard inlet/outlet with grooved nozzles,
  optional union nut or flange fittings with extra charge (p. 10)

Model	Power (kW)	Max. output (m3/h)	Max. head (m)	Gaskets	Seals	Shaft	Reference	Pump assy Reference
A15 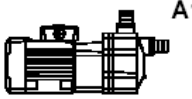	0.18	4.8	9	EPDM	13704/14261	protected	A15-51680	CA15-51681
				FPM	13703/13702		A15-51889	CA15-51890
A18 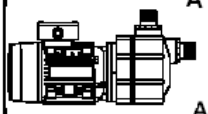	0.75	10	18	EPDM	13704/14261	protected	A18-51416	CA18-51417
				FPM	13703/13702		A18-51891	CA18-51892
A19	1.1	14	19	EPDM	13704/14261	protected	A19-51418	CA19-51419
				FPM	13703/13702		A19-51893	CA19-51894
A27 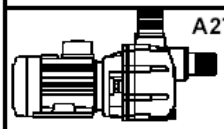	2.2	30	25	EPDM	13704/14261	uranus	SA2751442	CA27-51443
						titanium	SA2751444	CA27-51445
				FPM	13703/13702	titanium	SA2751446	CA27-51447
						protected	SA2751448	CA27-51449
A30 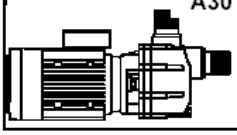	4	48	25	EPDM	13704/14261	uranus	SA3051450	CA30-51451
						titanium	SA3051452	CA30-51453
				FPM	13703/13702	titanium	SA3051454	CA30-51455
						protected	SA3051456	CA30-51457

FPM is the standard name for Viton.

RUBBER-LINED CAST IRON MOTOR-PUMPS WITH MECHANICAL SEALS

A31 to A33 models

- . 230/400 V - 50 Hz - 3 ph motor - 2,900 rpm
- . Carbide/carbide seals (other types of seals available upon request)
- . Rubber-lined cast iron volute case
- . Inlet/outlet with flange fittings

								Pump assy
A31 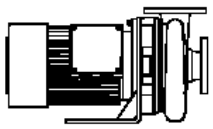	5.5	52	32	EPDM	13704/14261	uranus	A31-50315	CA31-50408
						titanium	A31-50019	CA31-50409
				FPM	13703/13702	titanium	A31-50742	CA31-50743
						protected	A31-50018	CA31-50754
A32	7.5	57	50	EPDM	13704/14261	uranus	A32-50316	CA32-50410
						titanium	A32-50020	CA32-50411
				FPM	13703/13702	titanium	A32-50744	CA32-50745
						protected	A32-50379	CA32-50755
A33	4	40	40	EPDM	13704/14261	uranus	A33-50637	CA33-50412
						titanium	A33-50636	CA33-50413
				FPM	13703/13702	titanium	A33-50748	CA33-50749
						protected	A33-50746	CA33-50747

FPM is the standard name for Viton.

MECHANICAL SEALED MOTOR-PUMPS IN PVDF

Self-repriming

A18 to A30 models

. PVDF pump assy, FPM gaskets. EPDM gaskets upon request
. 230/400 V - 50 Hz - 3 ph motor - 2,900 rpm
. Serial-mounted strainer built into the volute case
. Serial-mounted carbide/carbide seals (other types of seals available upon request)
. Self-repriming
. Standard inlet/outlet with grooved nozzles,
optional union nut or flange fittings with extra charge (p.10)

Model	Power (kW)	Max. output (m3/h)	Max. head (m)	Gaskets	Seals	Shaft	Reference	Pump assy Reference
A18	0.75	10	18	FPM	13703/13702	protected	**A18-51232**	**CA18-51396**
A19	1.1	14	19				**A19-51255**	**CA19-51482**
A27 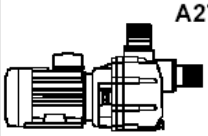	2.2	30	25	FPM	13703/13702	protected	**SA2751485**	**CA27-51486**
A30 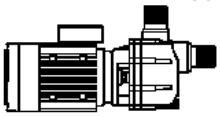	4	48	25	FPM	13703/13702	protected	**SA3051487**	**CA30-51488**

FPM is the standard name for Viton.

Motor-pumps with other voltages and/or 60 Hz : upon request, with extra charge

Drawings show motor-pumps with grooved nozzles

VERTICAL MOUNTED MOTOR-PUMPS WITH CANTILEVER SHAFT
T050, T070, T100, T140, T200,

- Polypropylene pump assy
- 230/400 V - 50 Hz - 3 ph motor - 3,000 rpm
- Self-repriming
- Serial-mounted strainer, external or built into the volute case according to models
- Standard outlet tube with union nut

T50 - T70

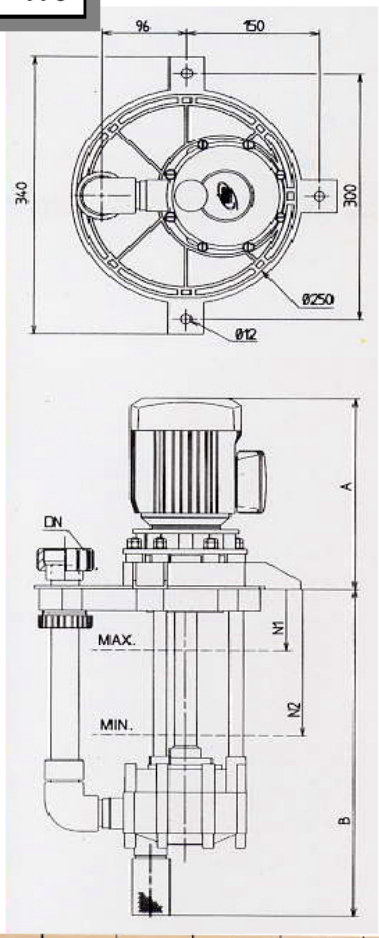

T100 - T140 - T200

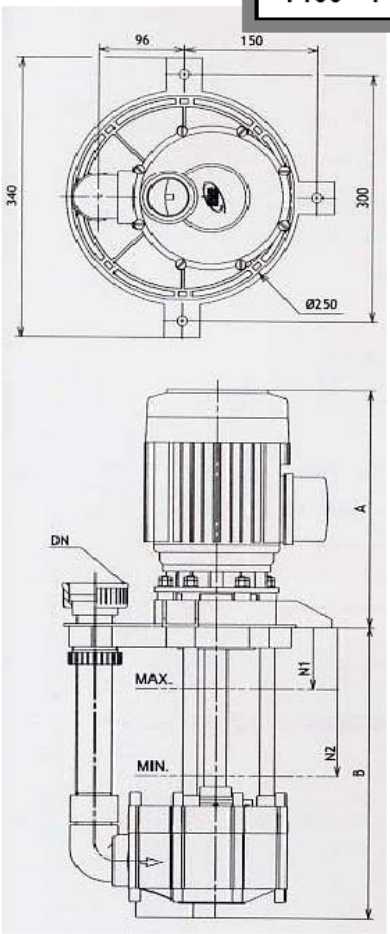

	A	B	N1 Highest level	N2 Lowest level	DN	Motor power	Tension	Maximum S.G.	Weight
T050	239 mm	401 mm	75 mm	180 mm	Ø25 mm	0.25 kW	230 / 400 V	1.3	9.5 kg
T070	250 mm	401 mm	75 mm	180 mm	Ø25 mm	0.55 kW	230 / 400 V	1.3	11.5 kg
T100	250 mm	356.5 mm	75 mm	180 mm	Ø25 mm	0.75 kW	230 / 400 V	1.3	14.5 kg
T140	282 mm	356.5 mm	75 mm	180 mm	Ø32 mm	1.1 kW	230 / 400 V	1.3	16.5 kg
T200	282 mm	356.5 mm	75 mm	180 mm	Ø32 mm	1.1 kW	230 / 400 V	1.3	16.5 kg

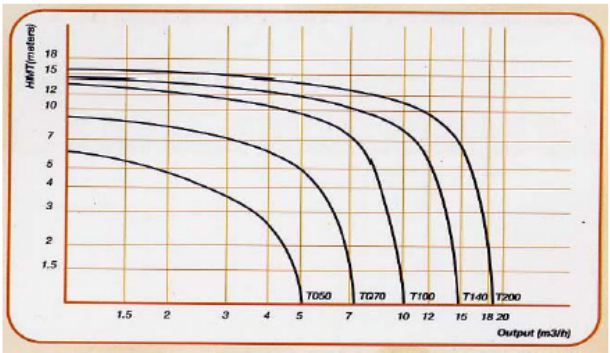

VERTICAL MOUNTED MOTOR-PUMPS WITH CANTILEVER SHAFT

Immersed mounting imperative, self priming

VERSIONS IN POLYPROPYLENE

T050 to T200 models

. Polypropylene pump assy
. 230/400 V - 50 Hz - 3 ph motor - 3,000 rpm
. Self priming
. Serial-mounted strainer, external or built into the volute case according to models
. Standard outlet tube with union nut,
optional outlet tube with grooved nozzle, with extra charge
. Optional square fixation plate 302 mm wide (p.10)

Model	Power (kW)	Max. output (m3/h)	Max. head (m)	Pump height (excluding motor) (mm)	Gaskets	Reference
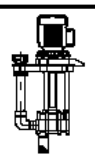 **T050**	0.25	5	6	401	EPDM FPM	**T050-52050** **T050-52052**
T070	0.55	7.2	9	401	EPDM FPM	**T070-52051** **T070-52054**
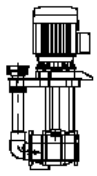 **T100**	0.75	10	13	356.5	EPDM FPM	**T100-52030** **T100-52031**
T140	1.1	14.5	14.3	356.5	EPDM FPM	**T140-52033** **T140-52034**
T200	1.1	18.5	15.5	356.5	EPDM FPM	**T200-52036** **T200-52037**

VERSIONS IN PVDF

T050 to T200 models

. PVDF pump assy, FPM gaskets. EPDM gaskets upon request
. 230/400 V - 50 Hz - 3 ph motor - 3,000 rpm
. Self priming
. Serial-mounted strainer, external or built into the volute case according to models
. Standard outlet tube with union nut,
optional outlet tube with grooved nozzle, with extra charge
. Optional square fixation plate 302 mm wide (p.10)

Model	Power (kW)	Max. output (m3/h)	Max. head (m)	Pump height (excluding motor) (mm)	Gaskets	Reference
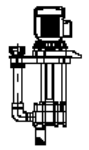 **T050**	0.25	5	6	401	FPM	**T050-52053**
T070	0.55	7.2	9	401	FPM	**T070-52055**
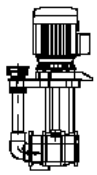 **T100**	0.75	10	13	356.5	FPM	**T100-52032**
T140	1.1	14.5	14.3	356.5	FPM	**T140-52035**
T200	1.1	18.5	15.5	356.5	FPM	**T200-52038**

FPM is the standard name for Viton.

Motor-pumps with other voltages and/or 60 Hz : upon request, with extra charge

Drawings show motor-pumps with union nut

VERTICAL MOUNTED MOTOR-PUMPS WITH BOTTOM BEARING
T101, T141, T201

- Polypropylene pump assy
- 230/400 V - 50 Hz - 3 ph motor - 3,000 rpm
- Self priming
- Serial-mounted strainer built into the volute case
- Standard outlet tube with union nut
- Bottom bearing made of 99 % alumina ceramic

T101 - T141 - T201

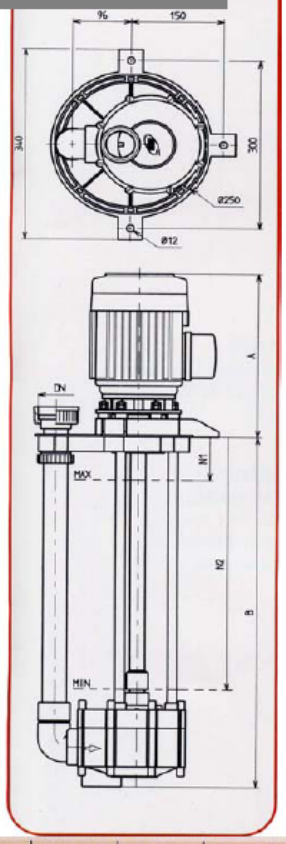

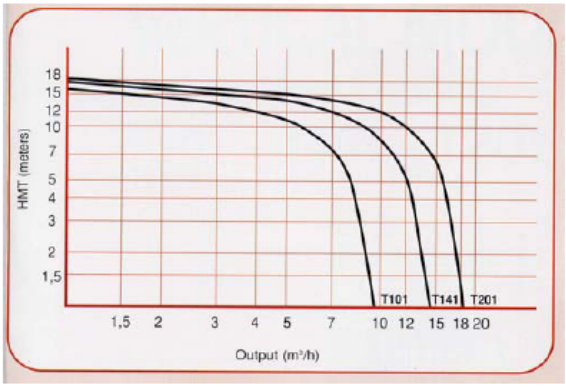

	A	B	N1 Highest level	N2 Lowest level	DN	Motor power	Tension	Maximun S.G.	Weight
T101	250 mm	556.5 mm	75 mm	380 mm	Ø32 mm	0.75 kW	230 / 400 V	1.3	15.5 kg
	250 mm	756.5 mm	75 mm	580 mm	Ø32 mm	0.75 kW	230 / 400 V	1.3	16,0 kg
T141	282 mm	556.5 mm	75 mm	380 mm	Ø32 mm	1.10 kW	230 / 400 V	1.3	17.5 kg
	282 mm	756.5 mm	75 mm	580 mm	Ø32 mm	1.10 kW	230 / 400 V	1.3	18,0 kg
T201	282 mm	556.5 mm	75 mm	380 mm	Ø32 mm	1.10 kW	230 / 400 V	1.3	17.5 kg
	282 mm	756.5 mm	75 mm	580 mm	Ø32 mm	1.10 kW	230 / 400 V	1.3	18,0 kg

VERTICAL MOUNTED MOTOR-PUMPS WITH BOTTOM BEARING

Immersed mounting imperative, self priming

VERSIONS IN POLYPROPYLENE

T101 to T201 models

. Polypropylene pump assy
. 230/400 V - 50 Hz - 3 ph motor - 3,000 rpm
. Self priming
. Serial-mounted strainer built into the volute case
. Bottom bearing made of 99 % alumina ceramic
. Standard outlet tube with union nut,
optional outlet tube with grooved nozzle, with extra charge
. Optional square fixation plate 302 mm wide (p.10)

Model	Power (kW)	Max. output (m3/h)	Max. head (m)	Pump height (excluding motor) (mm)	Gaskets	Reference
T101	0.75	10	16	556.5	EPDM	**T101-52006**
					FPM	**T101-52007**
				756.5	EPDM	**T101-52009**
					FPM	**T101-52010**
T141	1.1	14.5	17	556.5	EPDM	**T141-52015**
					FPM	**T141-52016**
				756.5	EPDM	**T141-52018**
					FPM	**T141-52019**
T201	1.1	18.5	18.5	556.5	EPDM	**T201-52024**
					FPM	**T201-52025**
				756.5	EPDM	**T201-52027**
					FPM	**T201-52028**

VERSIONS IN PVDF

T101 to T201 models

. PVDF pump assy, FPM gaskets. EPDM gaskets upon request
. 230/400 V - 50 Hz - 3 ph motor - 3,000 rpm
. Self priming
. Serial-mounted strainer built into the volute case
. Bottom bearing made of 99 % alumina ceramic
. Standard outlet tube with union nut,
optional outlet tube with grooved nozzle, with extra charge
. Optional square fixation plate 302 mm wide (p.10)

Model	Power (kW)	Max. output (m3/h)	Max. head (m)	Pump height (excluding motor) (mm)	Gaskets	Reference
T101	0.75	10	16	556.5	FPM	**T101-52008**
				756.5		**T101-52011**
T141	1.1	14.5	17	556.5	FPM	**T141-52017**
				756.5		**T141-52020**
T201	1.1	18.5	18.5	556.5	FPM	**T201-52026**
				756.5		**T201-52029**

FPM is the standard name for Viton.

Motor-pumps with other voltages and/or 60 Hz : upon request, with extra charge

Drawings show motor-pumps with union nut

VERTICAL MOUNTED MOTOR-PUMPS WITH BACK-IMPELLER
(CAN BE OPERATED OUT OF THE TANK) WITHOUT BOTTOM BEARING, HORIZONTAL OUTLET
Out of the tank or immersed mounting, self priming

VERSIONS IN POLYPROPYLENE

T102 to T202 models

. Polypropylene pump assy
. 230/400 V - 50 Hz - 3 ph motor - 3,000 rpm
. Self priming
. Serial-mounted strainer built into the volute case
. Standard inlet/outlet with grooved nozzles
optional union nuts with extra charge (p. 10)
. Optional square fixation plate 302 mm wide (p. 10)

Model	Power (kW)	Max. output (m3/h)	Max. head (m)	Pump height (excluding motor) (mm)	Gaskets	Reference
T102	1.1	11	14	356.5	EPDM	**T102-52244**
					FPM	**T102-52245**
T142	1.1	14	14.5	356.5	EPDM	**T142-52247**
					FPM	**T142-52248**
T202	1.5	20	17	356.5	EPDM	**T202-52250**
					FPM	**T202-52251**

VERSIONS IN PVDF

T102 to T202 models

. PVDF pump assy, FPM gaskets. EPDM gaskets upon request
. 230/400 V - 50 Hz - 3 ph motor - 3,000 rpm
. Self priming
. Serial-mounted strainer built into the volute case
. Standard inlet/outlet with grooved nozzles
optional union nuts with extra charge (p. 10)
. Optional square fixation plate 302 mm wide (p. 10)

Model	Power (kW)	Max. output (m3/h)	Max. head (m)	Pump height (excluding motor) (mm)	Gaskets	Reference
T102	1.1	11	14	356.5	FPM	**T102-52246**
T142	1.1	14	14.5	356.5	FPM	**T142-52249**
T202	1.5	20	17	356.5	FPM	**T202-52252**

FPM is the standard name for Viton.

Motor-pumps with other voltages and/or 60 Hz : upon request, with extra charge

Drawings show motor-pumps with grooved nozzles

VERTICAL MOUNTED MOTOR-PUMPS WITH BACK-IMPELLER
(CAN BE OPERATED OUT OF THE TANK) WITHOUT BOTTOM BEARING, VERTICAL OUTLET TUBE
Out of the tank of immersed mounting, self priming

VERSIONS IN POLYPROPYLENE

T102 to T202 models

. Polypropylene pump assy
. 230/400 V - 50 Hz - 3 ph motor - 3,000 rpm
. Self priming
. Serial-mounted strainer built into the volute case
. Standard outlet tube with union nut,
optional outlet tube with grooved nozzle, with extra charge
. Optional square fixation plate 302 mm wide (p. 10)

Model	Power (kW)	Max. output (m3/h)	Max. head (m)	Pump height (excluding motor) (mm)	Gaskets	Reference
T102	1.1	11	14	356.5	EPDM	**T102-52039**
					FPM	**T102-52040**
T142	1.1	14	14.5	356.5	EPDM	**T142-52042**
					FPM	**T142-52043**
T202	1.5	20	17	356.5	EPDM	**T202-52045**
					FPM	**T202-52046**

VERSIONS IN PVDF

T102 to T202 models

. PVDF pump assy, FPM gaskets. EPDM gaskets upon request
. 230/400 V - 50 Hz - 3 ph motor - 3,000 rpm
. Self priming
. Serial-mounted strainer built into the volute case
. Standard outlet tube with union nut,
optional outlet tube with grooved nozzle, with extra charge
. Optional square fixation plate 302 mm wide (p. 10)

Model	Power (kW)	Max. output (m3/h)	Max. head (m)	Pump height (excluding motor) (mm)	Gaskets	Reference
T102	1.1	11	14	356.5	FPM	**T102-52041**
T142	1.1	14	14.5	356.5	FPM	**T142-52044**
T202	1.5	20	17	356.5	FPM	**T202-52047**

FPM is the standard name for Viton.

Motor-pumps with other voltages and/or 60 Hz : upon request, with extra charge

Drawings show motor-pumps with union nut

FLANGE AND UNION NUT FITTINGS
price per unit, there are 2 fittings per pump

Flange fittings

Pump	ØA - ØC - n x ØB	Reference
M20 PP inlet M20 PP outlet	95 - 65 - 4 x 12	**S00011905** **S00011904**
M35 PP inlet M35 PP outlet	100 - 75 - 4 x 14	**S00012920** **S00012921**
M35 PVDF inlet M35 PVDF outlet	100 - 75 - 4 x 14	**S00012926** **S00012927**
M50-A15 PP inlet/outlet M50-A15 PVDF inlet/outlet	115 - 85 - 4 x 14	**S00012923** **12929**
M100-M140-A18-A19 PP inlet/outlet M100-M140-A18-A19 PVDF inlet/outlet	150 - 110 - 4 x 18	**S00013138** **13139**
M200 PP inlet/outlet M200 PVDF inlet/outlet	165 - 125 - 4 x 18	**S00013140** **13141**
M300-M400-A25-A27-A30 PP inlet M300-M400-A25-A27-A30 PP outlet	185 - 145 - 4 x 18 165 - 125 - 4 x 18	**S00012916** **S00012917**
M300-M400-A25-A27-A30 PVDF inlet M300-M400-A25-A27-A30 PVDF outlet	185 - 145 - 4 x 18 165 - 125 - 4 x 18	**12931** **12933**

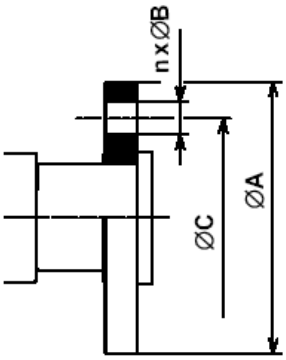

Union nut fittings

Pump	internal Ø - ØA	Reference
M20 PP inlet M20 PP outlet	DN 15 - 1"	**S00012042** **S00012043**
M35 PP inlet M35 PP outlet	DN 20 - 1" 1/4	**S00012918** **S00012919**
M35 PVDF inlet M35 PVDF outlet	DN 20 - 1" 1/4	**S00012924** **S00012925**
M50-A15 PP inlet/outlet M50-A15 PVDF inlet/outlet	DN 25 - 1" 1/2	**S00012922** **12928**
M100-M140-A18-A19 PP inlet/outlet M100-M140-A18-A19 PVDF inlet/outlet	DN 40 - 2" 1/4	**S00013134** **13135**
M200 PP inlet/outlet M200 PVDF inlet/outlet	DN 50 - 2" 3/4	**S00013136** **13137**
M300-M400-A25-A27-A30 PP inlet M300-M400-A25-A27-A30 PP outlet	DN65 - Tr108x5 DN50 - 2" 3/4	**S00012914** **S00012915**
M300-M400-A25-A27-A30 PVDF inlet M300-M400-A25-A27-A30 PVDF outlet	DN65 - Tr108x5 DN50 - 2" 3/4	**12930** **12932**
T102-T142 PP inlet/outlet T102-T142 PVDF inlet/outlet	DN 40 - 2" 1/4 (PP NUT) DN 40 - 2" 1/4 (PVDF NUT)	**14855** **14856**
T202 PP inlet/outlet T202 PVDF inlet/outlet	DN 50 - 2" 3/4 (PP NUT) DN 50 - 2" 3/4 (PVDF NUT)	**14857** **14858**

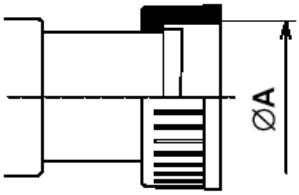

SQUARE FIXATION PLATE 302 X 302 MM FOR VERTICAL MOTOR-PUMPS
delivered with screws and protective caps for screws

Pump	Reference
ALL SIEBEC VERTICAL PUMP MODELS "T" TYPE	**44857**